Create pdf

Lampholders and starter holders

26.732.8201

2GX13 Lampholders for circular lamps T5

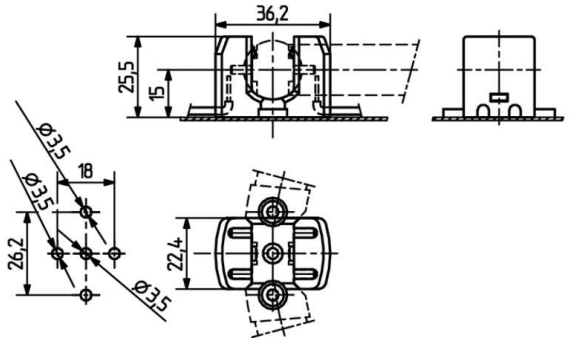

colour	pkg.	wt.	part no.
white	250	11 g	26.732.8201.50

Approval: additional cULus (75W /250V)

Lamp centre: 15 mm
Screw fixing

Housing: PC

- Screw fixing with countersunk screw ISO 2009 - M3 or self-tapping screws ISO 1481-ST 2.9 x 6.5-C
- Wiring from above the mounting plate or through the metalwork

T 110		0.6 - 1.0 mm²

Document generated on: We, 8. February 2017 - 16:18